# The DYNAMX/CQ Experiments

**Richard Lee**
**(Jet Propulsion Laboratory, California Institute of Technology)**

**© 2010 California Institute of Technology. Government sponsorship acknowledged.**

# Outline

- History
- Science objectives/need for space
- Experiment and current status
- Remaining work and timeline

# History: DX/CQ

- The DYNAMX (DX) Experiment
- "Critical Dynamics in Microgravity".
- PI: Prof. Robert V. Duncan (University of Missouri).
- DX chosen in the 1991 NRA.
- 1996 passed SCR
- 1999 passed RDR
- ATP in 2000

- The CQ Experiment
- "Enhanced Heat Capacity of Superfluid Helium in a Heat Flux".
- PI: Prof. David L. Goodstein (Caltech).
- CQ chosen in the 2000 NRA as a guest experiment on DX.
- Funding started in June 2001.
- In April 2002, at joint SCR/RDR, recommended for ATP.

- Passed joint DX/CQ CDR September 2003
- DX/CQ cancelled 2004: NASA's new Moon and Mars

# History: LTMPF

- <u>The Low Temperature Microgravity Physics Facility</u>
- Reusable, unmanned, physics lab on ISS.
- Accommodate two low T experiments.
- Dock on ISS for 6 months before returning to Earth for new experiments.
- DX/CQ was scheduled for M1 mission in ~ 2007.
- LTMPF passed CDR, 70% built – sat in boxes at JPL.
- Also cancelled in 2004.

# Why we study liquid helium

- Near ideal system for studying critical pt. phase transitions.
- Sharp transition.
- No impurity smearing.
- Can make measurements close to transition (sub-nano-Kelvin thermometry).
- Measure divergence of properties … *e.g.* heat capacity.

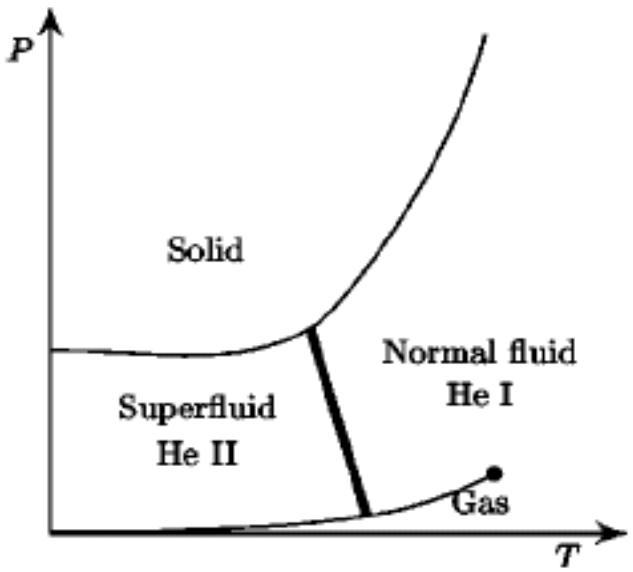


Goodstein & Chatto, *Am. J. Phys.* **71** (9), 2003

# *e.g.* Specific heat capacity

Buckingham & Fairbank, *Progress in Low Temperature Physics* (1961)

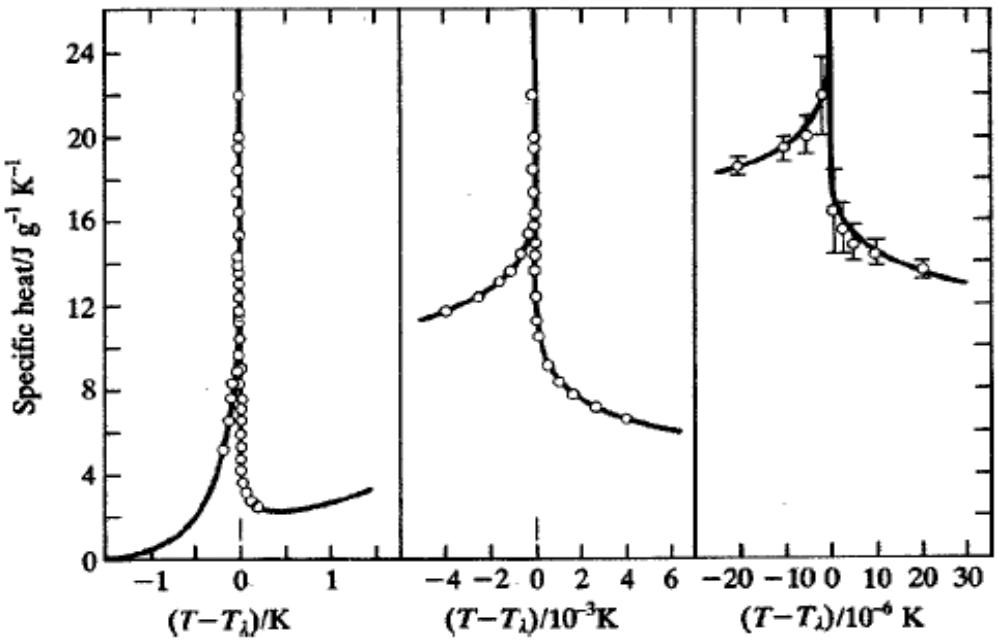


$$C \approx t^{-\alpha}$$

$$t = \frac{|T - T_\lambda|}{T_\lambda}$$

- Determine critical point exponents, confirm scaling laws – *static phenomena* (LAMBDA POINT, CHEX experiments).
- New area of study: *dynamic phenomena* (regime of DX/CQ).
- Test predictions of Dynamic Renormalization Group theory (DRG).

# The CQ experiment

- We make measurements on superfluid helium, very close to $T_\lambda$.
- We create a *dynamic situation* by applying a heat flux $Q \rightarrow$ creates a *counterflow*: $Q \propto \rho_s(v_n - v_s)$ = isothermal superflow.
- <u>Two</u> predictions:
  - Superflow breaks down at $T_c(Q) < T_\lambda$
  - Heat capacity is enhanced over the static measurement.

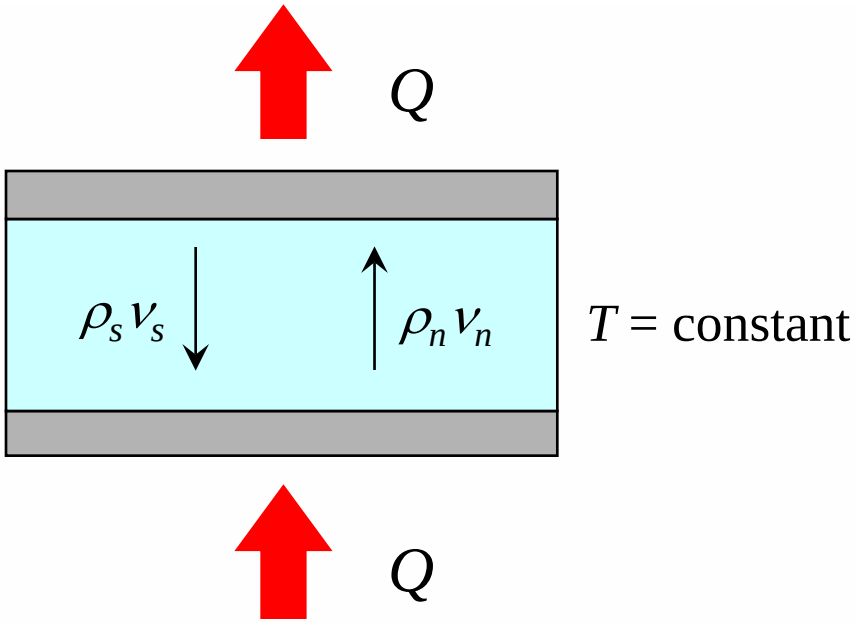


<u>New line of critical points in *Q*-*T* plane?</u>

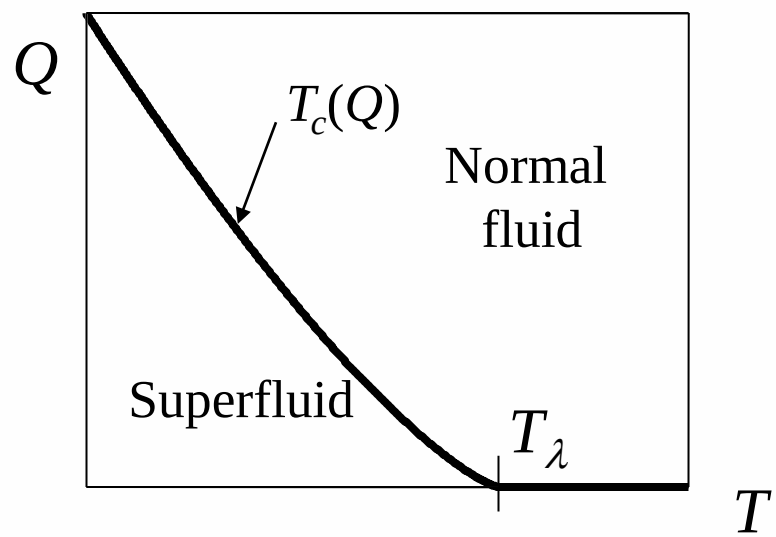

# CQ: ‘gravity gets you down’

- Gravity causes $T_\lambda$ to vary with liquid depth 1.3 μK/cm.

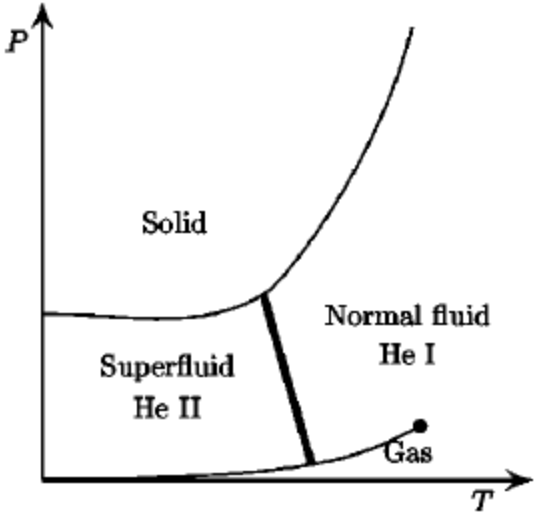


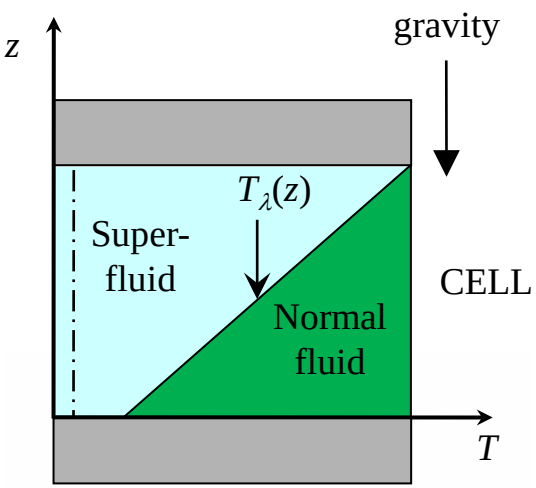


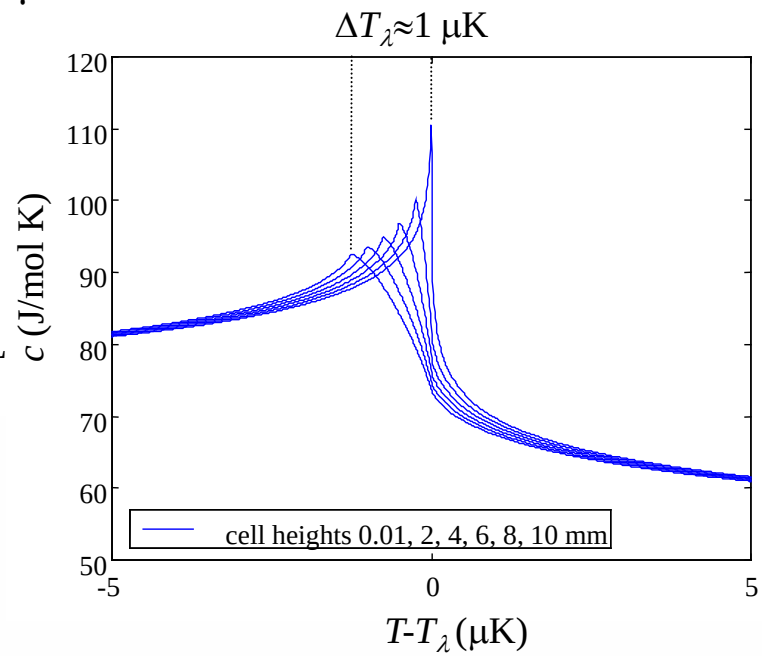


- Properties are smeared over range of $t$ - can’t get close to $T_\lambda$

- Why not reduce the cell height …… ?

# CQ: trying to beat gravity

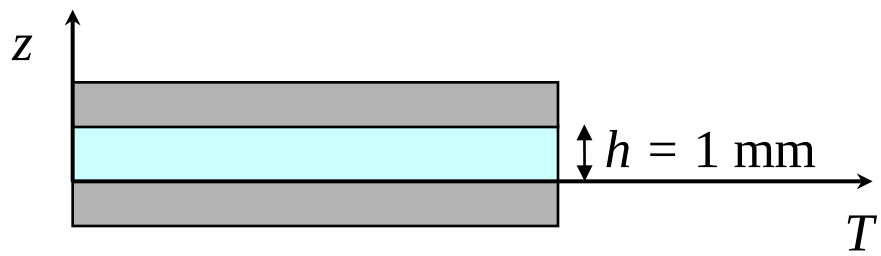


1) Can't reduce indefinitely - 'finite size effect' dominates.
   - At the cell walls, $\rho_s \rightarrow 0$ over a 'healing length', which diverges at $T_\lambda$
   - *e.g.* at 0.01μK below $T_\lambda$, *'healing length'* ~ 0.14 mm !
- No longer measuring <u>bulk properties</u> of the superfluid.

2) Also, <u>can't</u> have sidewall thermometry – therefore v. difficult to infer correct helium temperature.

- Rationale for micro-gravity - **no spatial variation in $T_\lambda$**
  - Can have a deep cell: measure bulk properties.
  - Can make measurements up to $T_\lambda$

# CQ: science objectives

1) Apply a constant heat flux, ***Q***, to a cell of superfluid $^4$He in $\mu$g.

2) Measure the enhancement in the specific heat, $\Delta C = C_Q - C_{Q=0}$, as $T_c(Q)$ is approached for a range of $Q$ values.

3) Test theoretical predictions for:

   **a) depressed transition temperature.**

   Haussmann et al., Phys. Rev. Lett. 67, 3404 (1991)

   Duncan et al., Phys. Rev. Lett. 60, 1522 (1988)

   **b) heat capacity enhancement.**

   Chui et al., Phys. Rev. Lett., 77, 1793 (1996)

   Haussmann et al., Czech. J. Phys., 46-S1, 171, (1996)

   Harter et al., Phys. Rev. Lett. 84, 2195 (2000)

   **c) superfluid thermal resistivity:**

   Baddar et al., J. Low Temp. Phys., 119, 1 (2000),

   Lee et al., J. Low Temp. Phys., 134, 495 (2004)

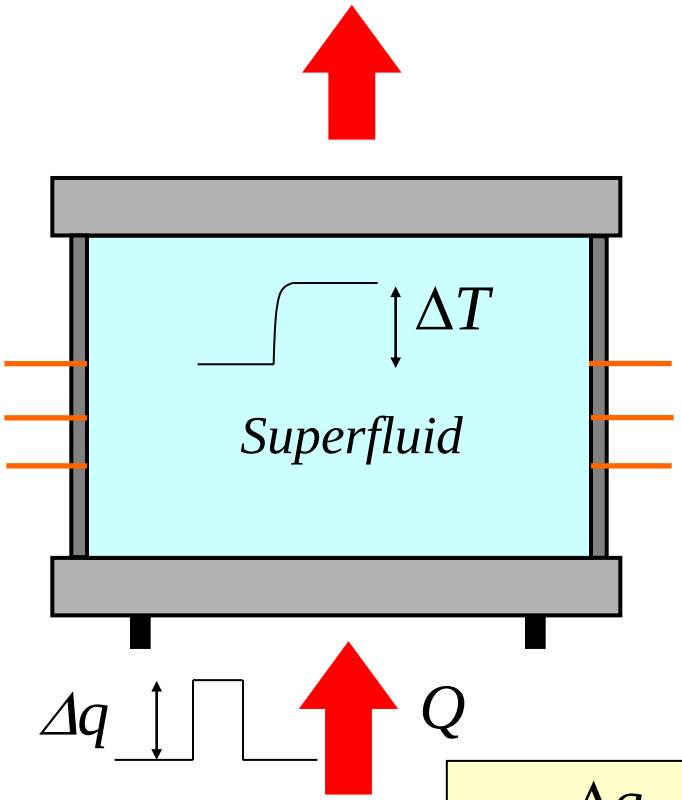


$$Q \text{ range} = 0.1 \text{ to } 6\,\mu\text{W/cm}^2$$

$$-5\,\mu\text{K} \le T - T_\lambda \le 0$$

$$C = \frac{\Delta q}{\Delta T}$$

$$\Delta q \approx 30 \text{ nJ}$$

$$\Delta T \approx 2 \text{ nK}$$

# The DX experiment

- DX operates: $T > T_c(Q)$, once an interface is present.
- Study the onset of long-range quantum order → Transition from constant T gradient (n/f heat conductivity) to constant T (s/f behavior) → Non-linear region = interface.
- Measurement of correlation length, $\xi$. On Earth gravity limits size of interface or $\xi \sim 100\ \mu m$.

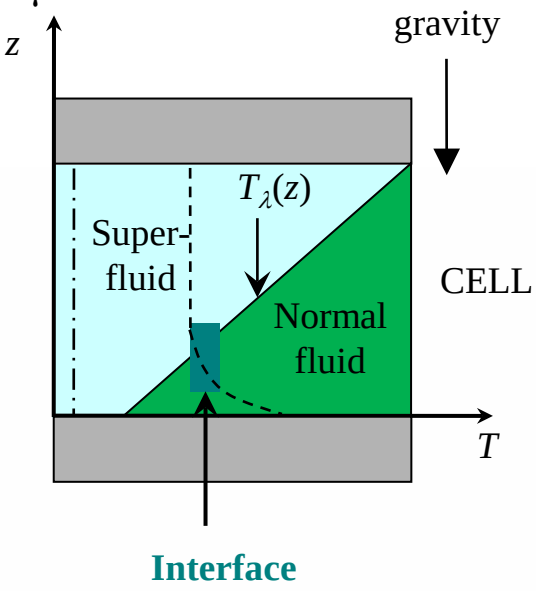


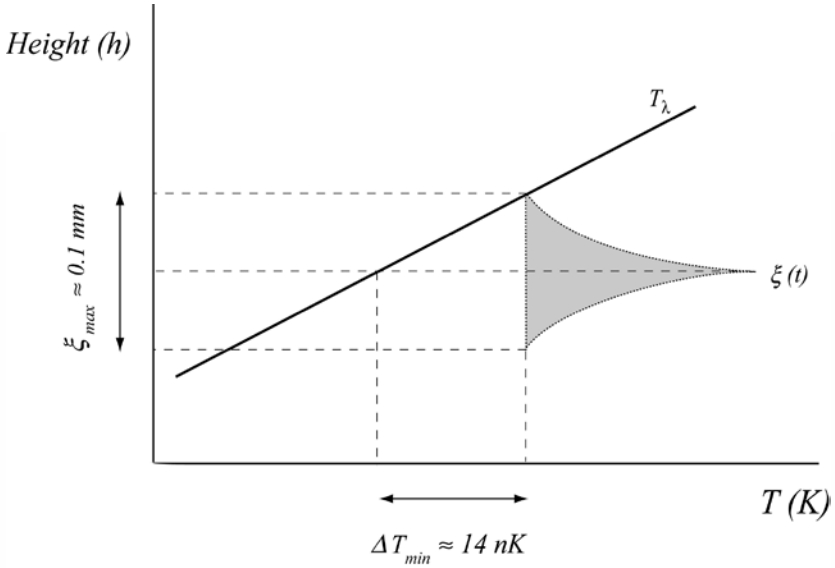


- Rationale for micro-gravity - **no spatial variation in $T_\lambda$**
  - Can establish/measure large ($\xi \sim 5$ mm) interface profiles (scale as $Q^{-1/2}$).

# DX: science objectives

1) Apply a constant heat flux, ***Q***, to a cell of superfluid $^4$He in μg and establish a superfluid/normal-fluid interface.

2) Measure the interface profile for a range of *Q* values.

3) Test theoretical predictions for:

   **a) depressed transition temperature – extend measurements to lower *Q*.**

   Haussmann et al., Phys. Rev. Lett. 67, 3404 (1991)

   Duncan et al., Phys. Rev. Lett. 60, 1522 (1988)

   **b) look for hysteresis in $T_c(Q)$.**

   Onuki, J. Low Temp. Phys. 50, 433 (1983).

   Liu et al., Physica (Amsterdam) 194B - 196B, 597 (1994).

   **b) interface profile – thermal conductivity.**

   Day et al., Phys. Rev. Lett. 81, 2474 (1998)

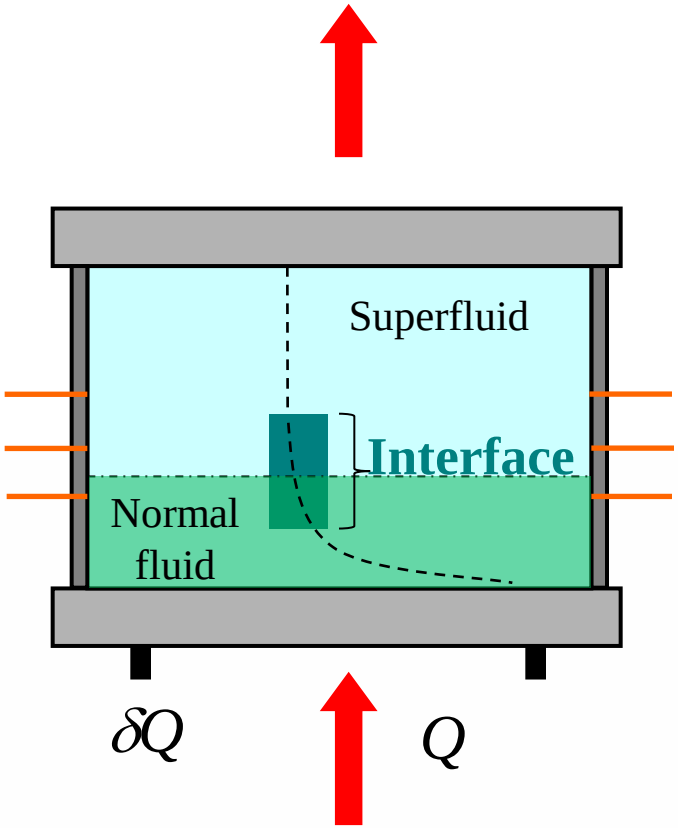


$$Q \text{ range} = 5 \text{ to } 200 \text{ nW/cm}^2$$

$$-250 \le T - T_\lambda \le 500 \text{ nK}$$

# Experiment

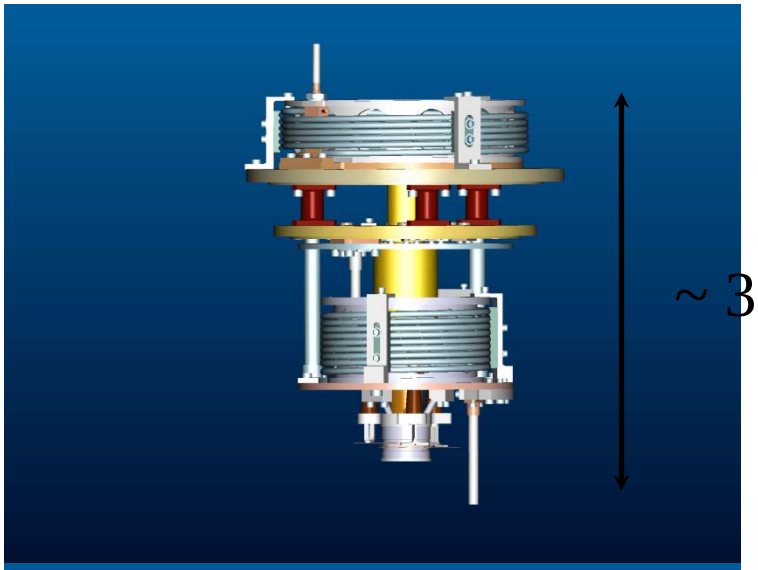

~ 30 cm

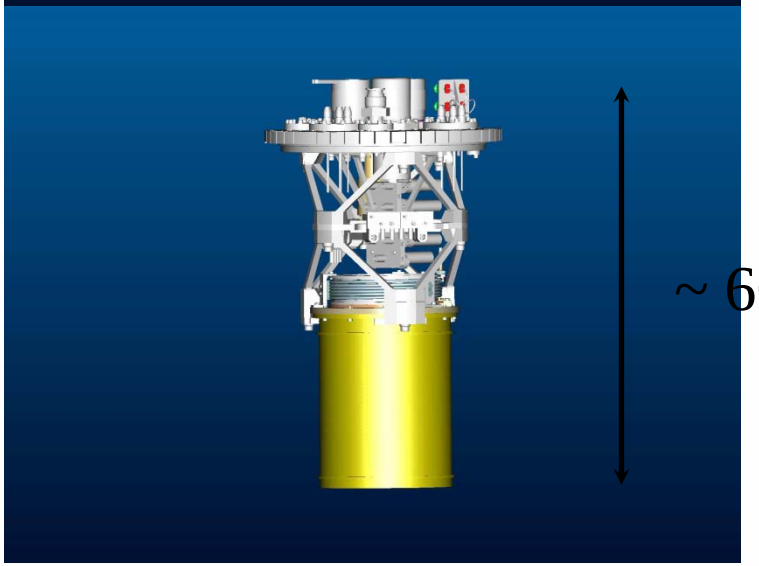

~ 60 cm

HRT: High Resolution Thermometers

Drift ≈ 3 fK/s (1 μK/decade), Noise ≈ 0.2 nK/√Hz

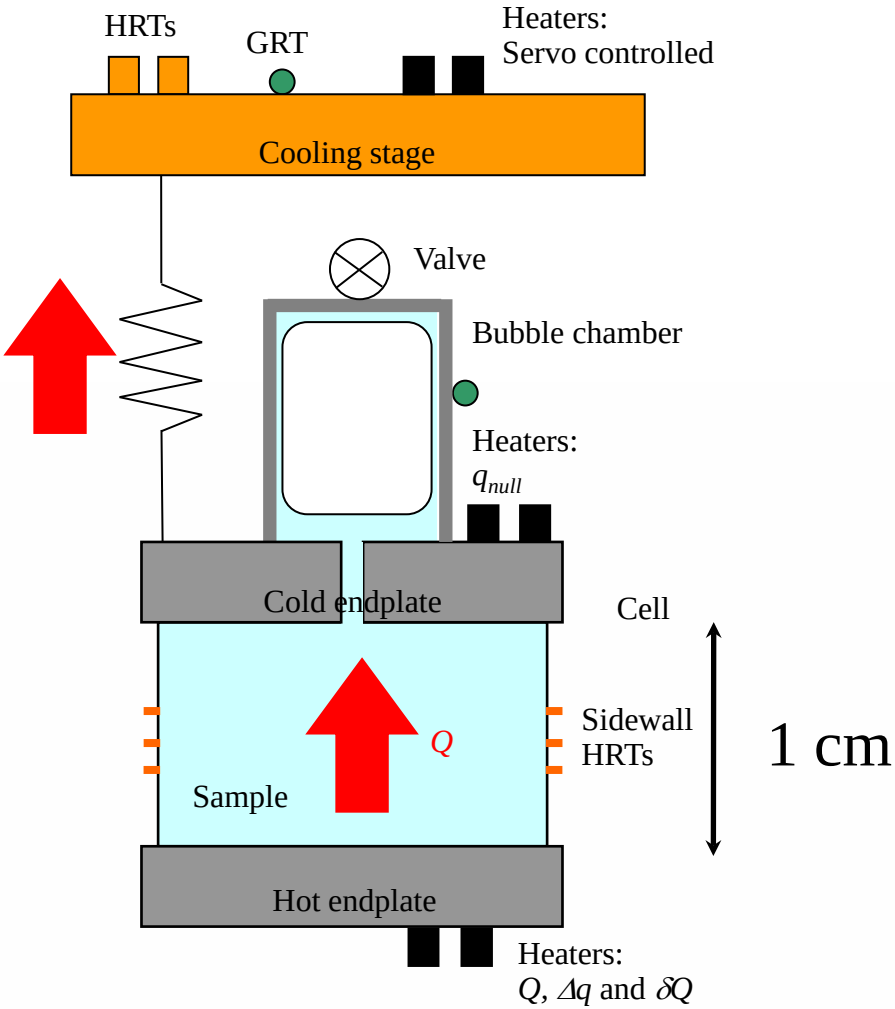

# Current status

- Several flight prototypes developed and tested.
- Almost all flight hardware drawings were completed and released.
- Flight software development ~ 15% complete.
- DX: almost ready for flight testing/integration (Rob Duncan).
- CQ: found problem with bubble chamber design in late testing – prevented a measurement.
    - Recommend removing bubble chamber and reverting back to a previous working arrangement.
    - Recommend a modification for extra science return.

# Change of cell design?

1) Bubble chamber required for cell safety on launch pad in case cooling failed.

   - Remove bubble chamber, replace with:
     - Small dead volume + vapor bubble.
     - Or, operate at constant volume.
   - But will need a backup cooler for launch pad, or accept risk?

2) Move redundant HRT to cell bottom endplate for <u>extra science return</u>.

   - **Measure breakdown, $T_c(Q)$, at the boundary.**
   - **Measure $R_{sk}$ – singular Kapitza resistance.**

Baddar et al., J. Low Temp. Phys., 24, 69 (1998)

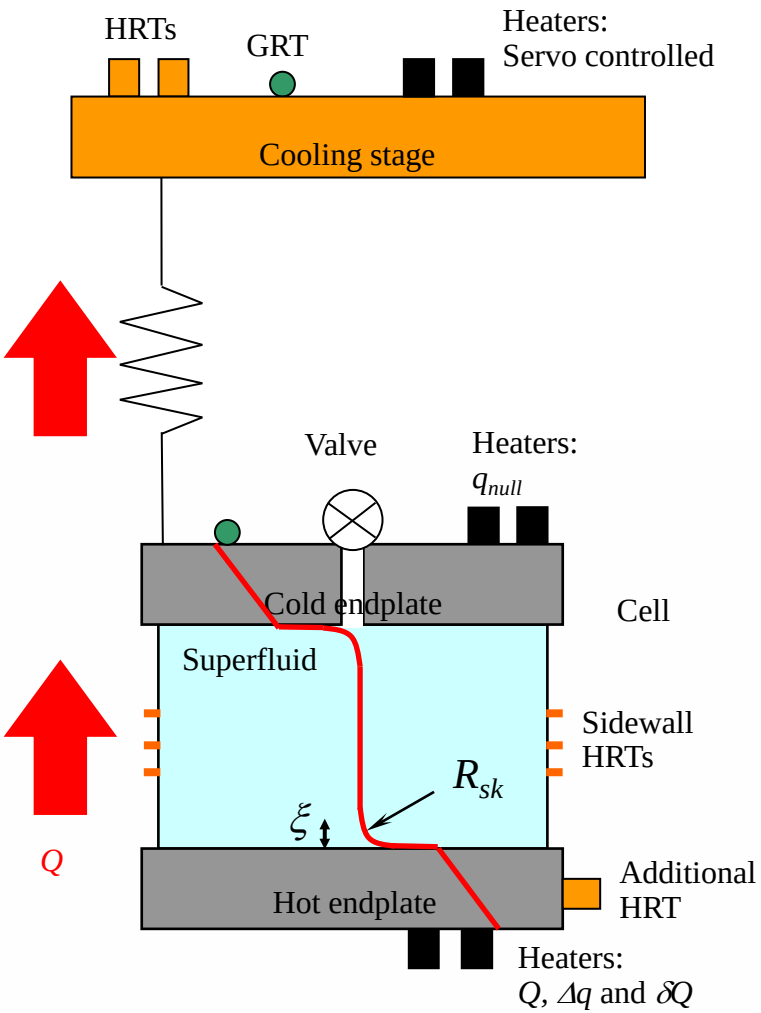

# Remaining work and timeline

- Modify cell and test new configuration for both DX and CQ. Also develop/test on-pad back-up cooler.
- Build flight apparatus and do sub-system flight testing/verification.
- Finish and test flight software on sub-system.
- Integrate into LTMPF.
- Do complete flight system testing/verification.
- Approximate timeline: 3 to 6 years.

---

- Also requires LTMPF to be completed in a parallel effort.

# Possible collaborators/ recommendations

- NIST to develop a flight, single channel or multiplexing, SQUID system for LTMPF (read the precision thermometry for DX/CQ).
- JAXA who currently operate the Japanese Exposed Facility on the ISS - original proposed docking site for LTMPF.

- Recommend: DX/CQ and LTMPF flight projects be recommenced in order to full-fill the substantial intellectual and financial investment that has been made by NASA and JPL.